CROSS FLOW FAN
DC

LWCD-030 Double & Triple Fan

Motor Type : DC Brushless External Rotor Motor
Housing Material :Aluminum Alloy
Blade Material : Aluminum Alloy
Insulation Class : B/F/H
Bearing Type: Ball bearing / Sleeve Bearing
Speed Control : 0~10V / PWM control
Operation Temperature : - 25 ℃ ~ +60 ℃

TELL : 0086 574 6218 9863
FAX : 0086 574 6218 9863
Email : sales@zjlongwell.com Website : www.zjlongwell.com

■ Technical Specification

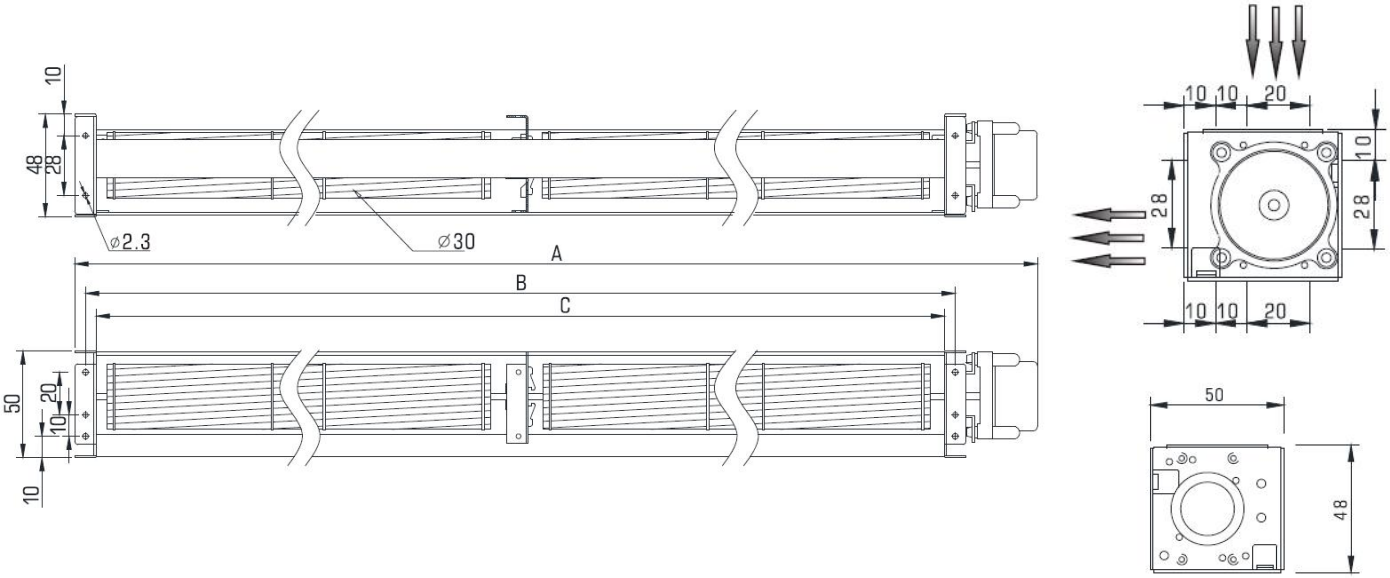

Model	Dimension(mm)			Voltage	Current	Speed	Pressure	Airflow	Noise	Blower
	A	B	C	V	A	rpm	Pa	m³/h	dB(A)	
LWCD-30530M-20	583.5	540	530	24	0.12	2500	18	85	32	double
LWCD-30610M-20	663.5	620	610	24	0.16	2450	18	100	33	double
LWCD-30650M-20	703.5	660	650	24	0.17	2400	17	105	34	double
LWCD-30718M-20	771.5	728	718	24	0.18	2400	17	115	35	double
LWCD-30800M-30	853.5	810	800	24	0.19	2400	17	130	36	triple
LWCD-30854M-30	907.5	864	854	24	0.22	2400	17	140	36	triple
LWCD-30920M-30	973.5	930	920	24	0.22	2400	17	150	37	triple
LWCD-30986M-30	1039.5	996	986	24	0.27	2400	17	160	37	triple
LWCD-301082M-30	1135.5	1092	1082	24	0.31	2400	17	175	38	triple